高压/低压预装式变电站安装使用说明书

Installation Operation and Maintenance Manual

Prefabricated Substation

顺特电气设备有限公司
SUNTEN ELECTRIC EQUIPMENT CO.,LTD.

地址(Address)：广东省佛山市顺德大良红岗工业区（528300）
总机(Tel)：+86-757-22666888
传真(Fax)：+86-757-22635597
销售热线(Sales Hotline)：+86-757-22666666
服务热线(Service Hotline)：+86-757-22338222
网址(Website)：www.sunten.com.cn

2011年10月版

说明：本资料所示内容，因公司改良会有所变更，敬请谅解。
Notice : The information provided in this catalog is subject to change without notice.
警告：本样本及知识产权属顺特电气设备有限公司所有，未经许可，翻印必究。
Warning : The copyright and intellectual property of this catalog are belong to SUNTEN. All rights reserved.

顺特电气设备有限公司
SUNTEN ELECTRIC EQUIPMENT CO.,LTD.

注意事项

（请遵照执行，否则可能引起故障或者导致使用困难）

●产品投运前，应置于通风干燥处，避免产品内部出现凝露而锈蚀。

●应按我公司基础图要求保证基础的平整度，避免由于基础不平整导致产品外壳变形。

●必须按照我公司提供的基础图要求，保证基础的通风散热面积，否则产品将由于散热不良而影响长期安全运行。

●预装式变电站和基础之间须可靠固定，避免产品在地震或台风情况下出现移位。

●安装或检修过程中,预装式变电站小室门处于开启状态时,应使用门钩固定，避免风吹猛烈摆动而破坏。

●本产品应定期进行巡视，并按有关规程对产品作必要的维护和检修。

●未述及的维护检修项目请参照相关元器件使用说明书或DL/T596-1996《电力设备预防性试验规程》进行。

Notices:

（Please follow this manual. Otherwise, it may cause troubles or difficulties in use）

● Before commissioning, place the product in a ventilated and dry place so as to avoid corrosion caused by dew in the product.

● Ensure the flatness and evenness of foundation according to the foundation schematic diagram so as to avoid the housing of product being deformed.

● Make sure enough area for ventilation and heat dissipation is reserved for the foundation according to the requirement in the foundation schematic diagram provided by our company. Otherwise, long time safe operation of product will be affected because of poor heat dissipation.

● Fix the prefabricated substation reliably with the foundation so as to avoid shifting when earthquakes or typhoon occur.

● During the process of installing and overhaul, when the chamber door of prefabricated substation is open, use the door hook to fix it so as to avoid it being broken due to swung heavily by wind.

● Patrol the product regularly and perform necessary maintenance and overhaul according to relevant standards.

● For the maintenance and overhaul items unconcerned in this manual, please refer to the instruction manuals of relevant parts and components or DL/T596-1996 *Preventive Test Specification of Power Equipment.*

目 录

一、概述……1
二、正常使用条件……1
三、吊装及运输……2
四、检查验收……4
五、安装……5
六、交接试验……9
七、投运……10
八、巡视和检修……13

Contents

I. General……1
II. Normal Operation Conditions……1
III. Hoisting and Transportation……2
IV. Acceptance Check……4
V. Installation……5
VI. Commissioning test……9
VII.Commissioning……10
VIII.Patrol and Overhaul……13

一、概述 General

1. 名稱

Description

本系列产品全称为高压/低压预装式变电站，以下简称欧变。

The full name of this series of products is High/Low-voltage prefabricated substation Substation, hereinafter referred to as prefabricated substation.

2. 适用范围

Range of Application

本说明书适用于交流额定电压3～35kV，额定容量30～2000kVA，额定频率50Hz的欧变户内或户外的安装和使用,对于其它容量和频率的欧变也可参照执行。

This manual is applied to the installation and operation of prefabricated substations indoors and outdoors, which have rated AC voltage of 3-35kV, rated capacity 30-2000kVA and rated frequency 50Hz. It can be referred to for other prefabricated substations with different capacities and frequencies.

注：户内使用时应采用干式变压器或高燃点油变压器。

Note: Dry-type transformers or high fire-point oil-immersed transformers should be equipped in the indoor prefabricated substation.

二、正常使用条件 Normal Operation Conditions

1. 海拔高度不超过1000m。
   Altitude above sea-level: no more than 1000m

2. 环境温度：
   Ambient Temperature
   最高气温+40℃，最低气温–25℃；
   maximum temperature +40℃, minimum temperature -25℃;
   最高日平均气温+30℃，最高年平均气温+20℃。
   maximum daily average temperature +30℃, maximum annual average temperature +20℃.

3. 户外风速不超过35m/s。
   Wind speed outdoors : no more than 35m/s.

4. 空气相对湿度不超过90%（+25℃）。
   Relative humidity : no more than 90%(+25℃)

5. 地面倾斜度不大于3°。
   Ground inclination : no more than 3° .

6. 地震加速度：
   Seismic acceleration:
   水平不大于0.4m/s^2。垂直不大于0.2m/s^2。
   no more than 0.4m/s^2 along horizontal direction and 0.2 m/s^2 along vertical direction

7. 安装地点无火灾、爆炸危险、化学腐蚀和剧烈振动，并且不应是低洼积水处，同时应留足欧变开门所需空间。
   There should be no hazards of fire and explosion, chemical corrosion and intense vibration on the installation site. Do not put the prefabricated substation in a puddle and enough space should be reserved for opening the door of prefabricated substation.

8. 本产品应安装在合适的基础上使用（请参阅五.1条）。
   Install the product on a proper foundation(see Ⅴ.1. below)

9. 当环境条件超出上述规定范围时，请与我公司联系，我们将根据具体要求提供特殊设计的产品。
   If the actual environmental conditions exceed the above required ranges, please contact with our company. We will supply a specially designed product according to your specific requirements.

三、吊装及运输 Hoisting and Transportation

1. 吊装

Hoisting

1.1 欧变一般不允许采用叉车搬运。户内产品可采用钢管垫底滚推的方法或使用专用滚动垫铁将产品就位，户外产品应使用吊机吊装就位。
Forklift handling is forbidden for the prefabricated substation in general. The method of rolling and pushing the steel tubes underneath the product or special rolling parallels are used for moving the product to the place indoors, while a crane should be applied to hoist the product to the place outdoors..

1.2 吊装应按照有关起重安全规程进行，并应根据欧变铭牌标称重量选择合适起吊设备。
Hoisting should be conducted in accordance with relevant hoisting safety regulations, and an appropriate crane should be selected based on the weight indicated on the nameplate of prefabricated substation.

1.3 欧变起吊时应保证起吊钢丝绳之间夹角不大于60°，起吊时应保证欧变平稳起落。
The included angle between the hoisting steel wire ropes should not exceed 60° when hoisting the prefabricated substation, and make sure it rises and falls steadily.

1.4 采用上起吊方式时，应同时使用欧变顶上四个吊环（参见图一）。
Four lifting lugs on the top of prefabricated substation should be used at the same time when hoisting productt from its top (see Fig.1)

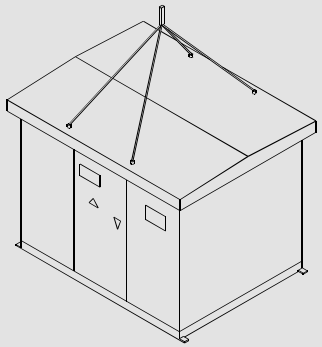

图一　预装式变电站上起吊示意图
Fig.1 Schematic Diagram of Hoisting a Prefabricated Substation from its Top

下起吊有两种起吊方式：既可直接用钢丝绳挂在箱体下部吊耳处且钢丝绳穿过箱盖挡环进行起吊，也可用专用吊具进行起吊（参见图二）。下起吊的吊耳有两种结构形式：固定式和隐藏式。固定式是箱体下部的吊耳为焊死不活动结构；隐藏式是箱体下部的吊耳可活动，吊装时将其向外拉出，用完后可推入箱体内。

Two methods are available when hoisting product from its bottom: you can hang steel wire ropes on the lifting lugs at the lower part of chamber and thread them through the retaining rings on the chamber lid or use special hoisting tools (see Fig. 2). There are two kinds of lifting lug structures: fixed and concealed. The fixed lifting lugs are welded at the lower part of chamber, while the concealed lifting lugs are movable, which can be pulled out for hoisting and be pushed into the chamber when it is not in use.

钢丝绳与箱体接触的部位应用软布或纸板隔开，以免对涂层造成损伤。
Soft cloth or paper boards should be put into the parts where wire ropes contact the chamber so as to avoid damaging the coating.

有包装箱的欧变起吊时，应在包装箱的四下角垫木有起吊标志处挂钢丝绳起吊。
Hoisting a prefabricated substation with package, steel wire ropes should be hung on the marked places

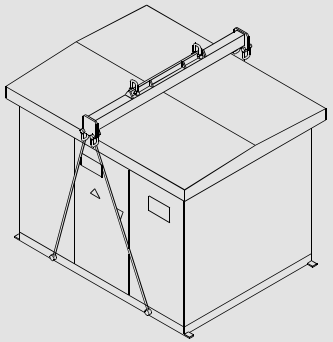

专用吊具起吊
Hoisting with Special Hoisting Tools

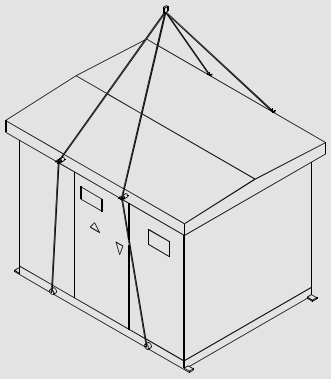

钢丝绳起吊
Hoisting with Steel Wire Ropes

图二　预装式变电站下起吊示意图
Fig. 2 Schematic Diagram of Hoisting a Prefabricated Substation from its Bottom

2. **运输**

Transportation

2.1 根据产品的外形尺寸和铭牌所示产品总重，选择合适的运输工具；产品在运输时应水平放置。
Select appropriate transporting equipment according to the overall dimensions of product and the total product weight indicated on the nameplate. Make sure the product is placed levelly during transportation.

2.2 对于震动易损的组件，如电表等，长途运输前可拆下单独采用防震包装，运输抵现场后请注意安装复原。
If the modules are easily damaged by vibration, the electrical meter for instance, package them separately to prevent vibration before long distance transportation. Do remember to install them back after they arrive at the destination.

2.3 产品运输时，应按其使用正常位置放置，并且一定要将产品底座或包装底盘与运输工具之间牢固绑扎好，运输过程中不允许产品有移动和明显摇晃现象。除产品底座、挂钩及顶部吊环外不允许绑拉产品的其它部位。
During transportation, place the product in the normal working position and securely tie the base of product or package with the transport tool together. The product is not allowed to move or apparently shake during transportation. Do not tie any other parts of the product except the product base, hooks and lifting lugs on the top.

2.4 防止产品碰撞变形或刮花。
Prevent the product from deformation caused by impact or being scratched.

四、检查验收 Acceptance Check

1. 按前述方法起吊卸下产品就位后，拆掉底座包装（如有）、变压器的钢丝固定绳（如有）、高低压柜门固定包装带（如有）、高低压柜门上的胶带（如有）。
After hoisting and unloading product to the destination according to the method described above, dismantle the base package (if any), the fixing wire ropes (if any) for the transformer, the fixing packing straps (if any) on the doors of high/low voltage cabinet and the adhesive tapes (if any) on the doors of high/low voltage cabinet.

2. 检查产品与订货合同是否相符，如产品型号、额定容量、线路方案等。
Check whether the parameters of product conforms to the purchase contact, for example, product model, rated capacity, line scheme and so on.

3. 检查出厂文件是否齐全。
Check whether the ex-factory documents are complete.

4. 检查装箱单各项目数量与实物是否相符。
Check whether the quantity of each item on the packing list conforms to the actual articles.

5. 检查外壳有无磕碰、变形，内部电器部件及连接有无损坏、脱落和松动。
Check whether there is any bump or deformation on the housing and whether the internal electrical parts and connections have any damage, falling off or looseness.

五、安 装 Installation

1. 安装前应做好基础、接地系统、电缆沟、预埋好进出线电缆和保护管，产品的安装地点应选择：
The foundation, grounding system and cable trench should be prepared prior to installation, and the inlet/outlet cable and protective tube should be buried beforehand. The installation location should :

A、非低洼易积水的地方；
Be free from any puddle;

B、通风良好的地方；
Be a place with good ventilation

C、尽量避让已有地下公共设施的场所。
Avoid the places with underground utilities already existed.

1.1 我公司在出厂文件中提供产品基础施工示意图，建议用户参照此施工，具体施工图还应根据实际地点和土质情况决定；特别须注意根据基础施工方案要求在基础中设置必要的、足够面积的通风口，以确保产品的长期可靠运行；或者参照本说明书图三、图四以及出厂文件中的产品外形图和基础图，根据实际情况，自行设计基础，但同样须注意按要求设置通风口。基础应采取防止小动物进入的措施，以免给产品正常运行带来危害。
Our company provides a schematic diagram for product foundation construction. We suggest you carry out the construction through referring to it. The specific construction diagram should still be determined by the place and the soil condition; special attentions should be paid to keep necessary vents with sufficient areas according to the requirement in the foundation construction plan to make sure the product operate reliably for long time; you can also design the foundation based on the actual condition and by referring to Fig.3 and Fig. 4 in this manual as well as the overall and foundation drawings in the ex-factory documentation. But you should also pay attention to keep the vents according to the requirement. Measures should be taken to prevent small animals from entering into the foundation so as to avoid bringing harms to the normal operation.

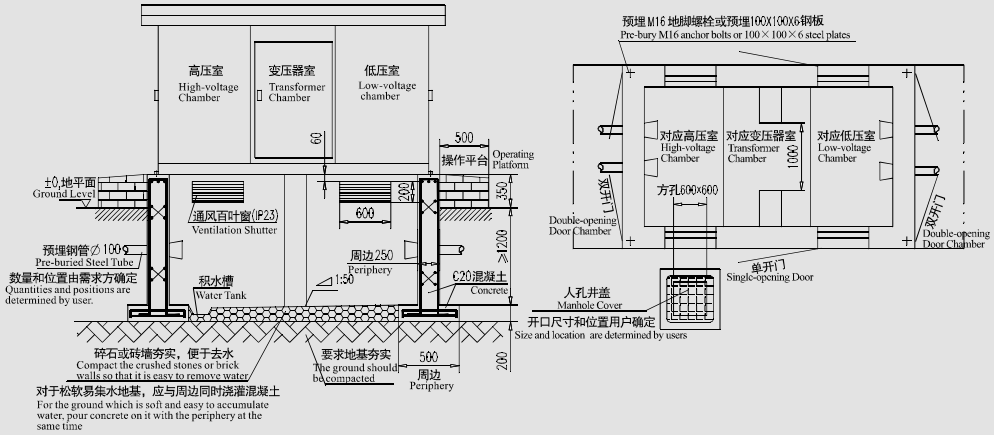

图三　目字形产品基础方案示意图
Fig.3　Schematic Diagram of Foundation for Prefabricated Substation with Parallel Configuration

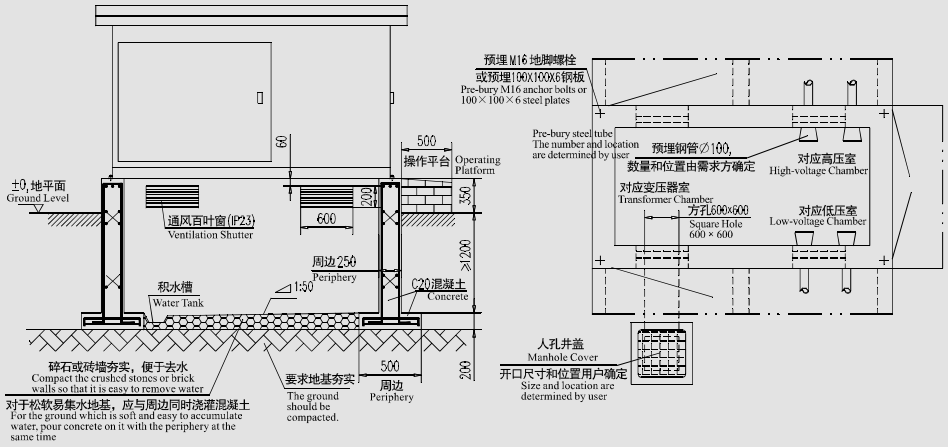

图四　品字形产品基础方案示意图
Fig.4　Schematic Diagram of Foundation for Prefabricated Substation with Configuration

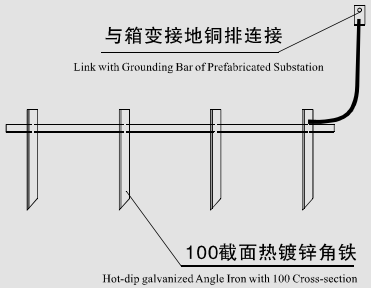

欧变基础说明

1. 步骤：坑挖好后夯实——浇素混凝土垫层——浇钢筋混凝土基础，顶部设置混凝土梁或墙——内部和外表面水泥砂浆抹平；

2. 电缆进出口应埋设G100钢管，埋设深度不应小于0.5米，管口宜做成喇叭形；钢管向外倾斜5/100，防雨水内灌；

3. 基础通风口有效面积应不小于本公司提供的基础图纸所对应面积；

4. 基础表面应打水平尺，以保证水平倾斜度不超过10mm，避免引起欧变安装变形，地基周边的操作踏板应向外倾斜，便于排除雨水；

5. 应预留一定的开门位置，以保证门能正常开启。

接地网安装要求

1. 接地体埋设深度不应小于0.6米；
2. 接地体双面焊接，焊口涂防锈漆；
3. 接地网电阻测试必须小于4欧姆。

Instruction for Prefabricated substation Foundation

1.Steps: compact the pit when it is dug----pour plain concrete layer----pour reinforced concrete foundation and set a concreted beam or wall----smooth the external and internal surfaces with cement mortar;

2.Bury G100 steel tubes at the entrances and exits of cables and the depths should be no less than 0.5m. The mouths of tubes are better to be horn-shaped. The steel tubes should be inclined outward so as to avoid rain irrigation;

3.The effective area of foundation ventilation vent should be no less than that is on the foundation diagram provided by our company;

4.A level should be used to measure the surface of foundation so as to ensure the inclination does not exceed 10mm, which can avoid the deformation of prefabricated substation. The operating pedal around the foundation should be inclined outward to facilitate draining water;

5.Reserve enough space for opening the door to make sure that the door can be opened smoothly.

Installing Requirements of Grounding Grid

1.The burying depth of grounding part should be no less than 0.6m;

2.The grounding part should be welded for both sides and the weld joints should be coated with antirust varnish;

3.The resistance of grounding grid should be less than 4 Ω.

对于拼装式产品的安装请参照图五。
Please see Fig.5 for the installation of piece-together products.

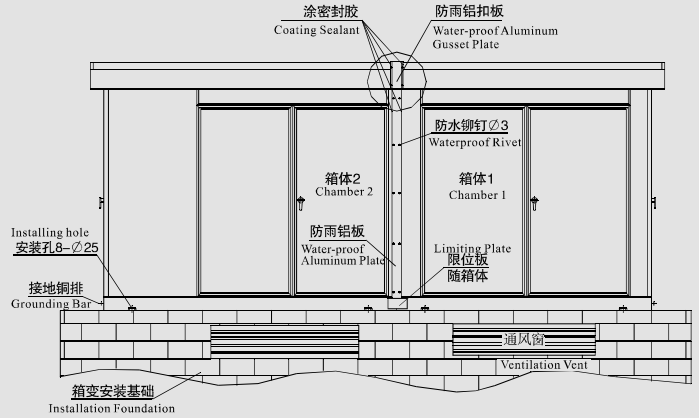

图五　拼装式变电站安装示意图
Fig.5 Schematic Diagram for Installation of Piece-together Substation

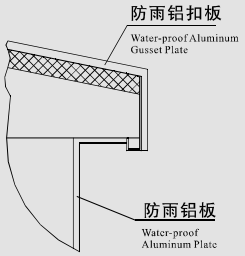

说 明

1. 按图示要求先将带有限位板的箱体正确安放在用户指定的基础位置上。

2. 将另一箱体通过限位板定位位置在另一侧，并保证两箱体水平高度一致，两箱体之间接合面间隙要小于3mm、且箱体的侧面在同一垂直面上。

3. 箱体安放就位后，要检查各箱体的门，是否因基础的安装面不平引起门开合不顺畅。可以通过箱体底座四角安放垫铁的方式调整引起的变形。

4. 检查安装正确后，先通过箱体安装孔固定箱体，再安装箱体间的电气连接。

5. 完成以上各项工作后再加装防雨铝扣板和铝板(见左图)：防雨铝扣板安装在箱盖上、其形状与箱盖吻合，盖在箱顶接缝的正中间，两边用铆钉固定：铝板安装在箱体两侧的接缝中，两侧用铆钉固定。铆钉的间距为200～250mm，固定后铝扣板和铝板接缝处及铆钉周边要清洁干净，晾干后接缝周边涂密封胶。

Instructions

1.At first, place the substation with limiting plate properly on the foundation designated by user according to the diagram.

2.Place the other substation on the other side which is positioned by the limiting plate and ensure the levels of two substations are the same. The clearance between the jointing surfaces of two substations should be less than 3mm and the sides of substations should be in the same vertical plane.

3.After placing the substations correctly, check the door of each substation to see if the door can not be opened smoothly due to the uneven installation surface of foundation. The deformation can be adjusted by means of placing pad blocks under the four corners of substation base.

4.After it is confirmed that the substations are installed correctly, fix the substations through the installing holes and then install the electrical connections between the substations.

5.After finishing various work above, install water-proof aluminum gusset plates and water-proof aluminum plates (see the left figure): the water-proof aluminum gusset plates should be installed on the lid of substation and its shapes should conform to the lid. water--proof aluminum concealed fastener panels should be installed in the seams between the two sides of substation and fixed by rivets on both sides. The distance between two rivets is 200~250mm. Clean the seams between aluminum gusset plates and aluminum plates and the spaces surround the rivets, and coat sealant after the seams are dried naturally.

1.2 接地系统由用户根据安装处地质条件和电力行业有关规程进行施工。无论何种接地方式，要求接地电阻均不大于4Ω。
The grounding systems can be constructed by users based on the soil condition and relevant regulations of local power department. Whatever grounding method is adopted, the grounding resistance should be no more than 4.

1.3 预先挖好电缆沟，预埋好电缆和保护管。交流单芯电缆不得单独穿入不隔磁的保护管内。保护管内径不小于电缆外径的1.5倍，多芯弯曲半径应大于电缆外径的15倍，单芯弯曲半径应大于电缆外径的20倍。
Dig cable trenches, and bury cables and protective tubes beforehand. AC. single-core cables should not be run through the protective tubes which do not isolate magnet. The internal diameter of protective tube should be no less than 1.5 times of the external diameter of cable. The bending radius of multi-core cable should be more than 15 times of the external diameter of cable and the bending radius of single-core cable should be more than 20 times of the external diameter of cable.

2. 安装时将产品按前述规定吊到基座上，摆正放平。若预埋地脚螺栓，则将其紧固好；若预埋铁，则将其与箱体焊接牢固（不推荐采用焊接形式固定欧变底座，如予焊接，则应对焊接部位做好表面防护）。
When installing the product, hoist it onto the foundation according to the requirements described above and place it right and level. If there are pre-embedded anchor bolts, tighten them; if any iron is to be buried beforehand, weld it with the substation (It is not recommended to use the welding method to fix the base of prefabricated substation. Otherwise, surface protection on the welded joints should be considered.).

3. 按有关标准进行电缆终端头的制作，接好高、低压电缆。
Make cable terminal according to relevant standards and connect the high and low voltage cables.

4. 电缆孔洞在电缆连接固定后，必须用电工胶泥或绝缘胶带封堵好，以防止小动物进入。
After the cables are fixed, seal the holes of cables with electrical plasters or insulation tapes so as to avoid little animals entering.

5. 将接地系统地端与产品接地端牢固连接，同时电缆屏蔽层及铠装也应接地。
Connected the terminal of grounding system with the grounding terminal of product securely and the shield and amour of cable should be grounded at the same time.

六、交接试验 Commissioning test

在安装完毕后，按国家有关交接试验标准进行交接试验。注意以下问题：
After the installation is completed, perform commissioning test according to relevant national standards. Pay attention to the following points:

1. 试验前先检查各部件是否接地良好，并保证箱体和系统主接地体可靠连接；
Check whether each part is well grounded before testing and make sure the substation and the main grounding parts of system are well connected.

2. 各器件的试验方法存在差异，请参考随附件提供的各器件说明书进行相关的检验；
Because the testing methods of each part are different, please perform relevant inspections on them by referring to the manuals of various parts provided with the accessories.

3. 高压绝缘试验时一定要卸下避雷器，试验结束以后重新安装好。
Make sure to remove the lightning arrester before high-voltage insulation test and install it back after the testing is done.

七、投运 Commissioning

1. 投运前检查

Check before Commissioning

安装完毕，送电投运之前，应对下列项目进行检查：
After the installation is completed and before commissioning, check the items below:

1.1 欧变的专用接地端必须接到基础内设置的的永久接地点上；高压电缆及避雷器的接地铜编织带必须与箱体内的总接地体可靠连接；高压电缆及避雷器外部接地线必须与箱体内的总接地体可靠连接；各门必须与箱体可靠连接；其它对此有要求的也必须可靠接地。
The special grounding terminal of prefabricated substation should be connected with the permanent grounding point prefabricated in the foundation; the high-voltage cable and the copper grounding strap of lightning arrester should be reliably connected with the main grounding part in the substation; the high voltage cable and the external grounding wire of lightning arrester should be reliably connected with the main grounding part in the substation; each door should be reliably connected with the substation and other items which are required to be grounded should be grounded as well.

1.2 产品内部及各元器件表面是否清洁、干燥、无异物。所有主回路、辅助回路及接地回路连接部分是否已紧固。电器组件及设备（包括变压器和高低压开关柜）的固定螺拴是否紧固。
Check whether the interior of product and the surface of each part are clean, dry and without foreign objects. Check whether all the connections of primary circuit, secondary circuit and grounding circuit are tightened Check whether the fixing bolts of electrical components and equipments (including the transformer and high/low voltage cabinets) are tightened.

1.3 操作机构、开关等可操作元器件是否灵活、可靠、准确；各联锁装置是否可靠联锁；对装有温度显示器、温度控制器、风机、防凝露控制等装置的产品，还应根据电气性能要求和这些产品的安装使用说明书进行检查。
Check whether the operational components of operating mechanisms and switches are flexible, reliable and accurate; Check whether various interlocking devices are reliably interlocked; For the products with the temperature indicator, temperature controller, fan, anti-dew controller and so on, check them by referring to the electrical performance requirements and their manuals of installation and operation.

1.4 辅助回路和控制回路的电气整定值是否正确，仪表与互感器的变比及接线极性是否正确，所有电器组件有无异常。用户可根据各自的需求，对低压配电柜中参数可调的主要元器件进行相应的设定。

Check whether the electrical setting parameters of secondary circuit and control circuits are right or not. Check whether the transformer ratio and wiring polarities of the instruments and instrument transformers are right or not. Check whether all the electrical components are normal. Users can set the main components in the low voltage cabinet, whose parameters are adjustable based on their individual needs.

A、按照计算值对继电保护装置整定参数进行设定，按负荷的需求对断路器整定参数进行设定。

Set the setting parameters of relay protective device according to the calculation values and set the setting parameters of circuit breaker according to the load requirements.

B、按补偿量的需求对无功补偿控制器的运行参数进行设定。

Set the operating parameters of reactive power compensation controller according to the compensation requirements.

C、按产品安装地的环境温度变化的需求对温度控制器的参数进行设定。

Set the parameters of temperature controller according to the environmental temperature changes in the location where the product is installed.

D、按产品安装地的环境湿度变化的需求对温湿度控制器的参数进行设定。

Set the parameters of temperature and humidity controller according to the environmental humidity changes in the location where the product is installed.

上述各器件的整定方法可以参考随机提供的相关器件说明书。

For the setting methods of various components described above, refer to relevant component manuals provided with the transformer.

1.5 如检查发现问题请立即解决，若用户无法解决，请与本公司联系。

If you find any problem during checking and can not solve it by yourself, please contact with our company.

2. 送电投运

Commissioning

在上述项目均符合要求情况下，按下述步骤送电投运。

Provided that each item described above conforms to the requirement, perform commissioning according to the following steps.

① 根据高压侧电压状况，将变压器分接开关调至合适档位。

Set the tapping of tap-changer to the proper position according to the high-voltage side conditions.

② 将高压室、变压器室内的柜门关好，所有高低压开关均应处于分闸位置。

Close the doors of high voltage chamber and transformer chamber. Set all the high/low voltage switches to the off position.

注意：对于欧变高压进线侧接地开关一定要断开，否则合前一级开关会造成三相对地短路。

Note: The grounding switch at the high-voltage inlet side of Prefabricated substation must be opened. Otherwise, closing the previous switch will cause three-phase to ground short circuit.

③ 合上外部高压进线电源，高压室带电显示器氖灯发亮。

Close the inlet power of external high voltage and the neon light in the live indicator of high voltage chamber will light.

④ 合上高压隔离开关，然后合高压主开关，观察仪表指示是否正常，操动机构上分合闸指示标牌标示在“合位”；使变压器处于空载运行状态，检查设备状况及电压是否符合要求。如有异常情况，应立即停止送电进行检查。如果在环境温度低于-20℃时投运，需空载运行24小时进行预热，才能进行下一步操作。

Close the high-voltage isolating switch and then the high-voltage main switch. Check whether the instruments indicate normally and the operating mechanism indicates that it is at the close position.Run the transformer without load and check whether the equipment condition and voltage meet the requirements. If there is any abnormal situation, stop commissioning and check the equipment at once. If the equipment is operated when the temperature is below -20℃, run the equipment without load for 24 hours to warm it up and then operate next step.

⑤ 高压通电正常后，可进行低压回路操作。先合低压进线隔离开关；按合闸按钮，合上低压进线断路器，操动机构上分合闸指示标牌标示在“合位”。

After the high voltage is powered on normally, the low-voltage circuit operation can be performed. First, close the low-voltage inlet isolating switch, then press the closing operation button, closes the low-voltage inlet circuit breaker and the operating mechanism indicates that it is at the close position.

⑥ 分别合上低压出线断路器，观察对应的电流表、指示灯，负载侧需有人监视，若有故障，应立即分断断路器。

Close the low-voltage outlet circuit breakers separately and check the corresponding ammeters and indicators. The load side should be monitored, in case there is any problem, cut off the circuit breakers,

⑦ 合电容补偿主开关，检查各指示灯、仪表是否正常，否则应断电检查。

Close the capacitance compensation main switch and check whether each indicator and instrument are normal. Otherwise, cut off the power and inspect them.

低压回路投入正常后，关闭并锁紧欧变所有大门。至此，欧变送电投运完成，产品可正常运行。

Once the low-voltage circuit is operating normally, close and lock all the doors of prefabricated substation. By now, the commissioning of prefabricated substation is done and it can run normally.

具体操作方法和步骤详见高压开关柜和变压器安装使用说明书。

For specific operating methods and steps, refer to the installation and operation manuals of high/low voltage cabinet and transformer.

八、巡视和检修 Patrol and Overhaul

1. 巡视

Patrol

欧变在使用过程中应适当进行巡视，以免造成损坏和故障的扩大，建议巡视频率不小于每月一次。对于设置在交通繁华路段的欧变，因其受碰触的机会较大，建议适当增加巡视频率，频率以每星期一次为宜。

Patrol the prefabricated substation appropriately during operation so as to avoid the expansion of damages and problems. It is recommended that the patrolling frequency should be no less than once a month. For the prefabricated substation located in the heavy traffic areas, given that the probability of getting impacted and touched is higher, it is suggested that the patrolling frequency should be increased to once a week.

敬告：在巡视过程中，如发现其它未述及异常情况或超出处理故障能力范围时，请及时与我公司联系，紧急情况须立刻断电处理。

NOTE: During the patrol, if any other unusual circumstance not covered above is found, or the issue is beyond your problem solving capability, please contact with our company in time. In an emergency, you must cut off the power immediately.

1.1 欧变外部巡视

Patrolling outside of prefabricated substation

欧变的外壳给内部的器件提供了必要的保护和防护，巡视时，必须注意外壳是否受外力的撞击而发生变形、破损等现象。检查箱体通风孔是否堵塞。

The housing of prefabricated substation provides necessary protection for the inner components. During patrolling, you must pay attention to whether the housing is deformed or broken by external impact. Check whether the ventilation vents of substation are blocked.

1.2 欧变内部巡视

Patrolling Interior of prefabricated substation

有条件的可使用红外线枪对电气元件进行探温，发现温度异常时应及时处理。

If the condition allows, detect the temperatures of electrical components with an infrared thermometer and deal with the case of abnormal temperature in time.

表1　主要巡视项目一览表

序号	项　目	异常情况	可能原因
1	门锁	不能有效锁紧	生锈或锁机构损坏
2	电气连接端子	连接处松动	没有拧紧
3	变压器	油位不正常（仅油浸式变压器）	变压器发生渗漏油
		温升过高	超负载运行
		声音异常	夹紧铁心的螺杆松动；电网过电压或过负荷；器身或套管局部放电
4	外壳密封	门、顶盖等密封结合部位有雨水渗漏现象	密封胶条老化或玻璃胶破损
5	带电显示器	不能正常显示	损坏
6	蓄电池	电解液泄漏；外观有异常变形	损坏
7	断路器	各引线接点发热或熔化	连接螺丝没有紧固好
		检查分合闸线圈有焦味	分合闸线圈烧毁
		高峰负荷时，断路器各连接部位发热变色	断路器电磁脱扣器的整定电流与使用场所设备负荷电流不相符
8	隔离开关	动、静触头间过热发红	负荷过重； 触头接触不良或操作时未完全合好
9	互感器	互感器存在放电声和异常声响	内部故障
		满负荷运行有异常气味	连接部位松动或绝缘损伤等
		绕组与外壳之间或引线与外壳之间有火花放电	绕组绝缘损坏或连接部位接触不良
10	母线和绝缘子	检查绝缘子瓷质部位是否有闪烁痕迹	绝缘子损坏；绝缘子污迹严重
		检查母线连接处颜色是否正常	接触不良或超负载运行
11	电容器	运行时异常放电声；电容器各连接部位异常发热现象；电容器外形发生鼓胀现象	电容器内部故障
		当运行电压超过额定电压的10%，运行电流超过额定电流的30%时	超负载运行
12	仪表、信号、指示灯	不指示或指示不正确	损坏
13	避雷器	有裂纹	损坏，需及时更换
		表面污秽	积尘较多
		倾斜，线路侧或接地侧端子松脱	安装不牢固
14	接触器	运行噪声大	铁心端面不平；有污物等
		触头过热、烧伤、有异味	超负荷运行；接线不牢；触头曾在过大电流下断开时将接触面烧伤等
15	SF6负荷开关气压表	气压表指示不符厂家规定	SF6气体泄漏

Table 1. Main Checklist of Patrolling

No .	Item	Abnormal Situation	Potential / Root Cause
1	Door Lock	Can not be locked effectively	Rusty or locking mechanism broken
2	Electrical Connecting Terminal	Joint loose	Not screw down
3	Transformer	Oil level not normal (only for oil-immersed transformer)	Transformer oil leakage
		Temperature rising too much	Working under over-load
		Unusual sound	Screw stem which clamps steel core gets loose; over-voltage or over-load of electrical grid; partial discharge of equipment or bushing
4	Housing Airproof	Sealing joints of door, cover, etc. penetrated by rain	Aging of sealing tape or silicon sealant broken
5	Live Indicator	Not display normally	Breakdown
6	Storage Battery	Electrolyte leakage; abnormal deformation in appearance	Breakdown
7	Circuit Breaker	Lead wire joint heating or melting	Connecting screws not tightened
		On/Off switching coil smells burnt	On/off switching coil burnt down
		Each connecting part of circuit breaker heating and changing color under top load	Setting current of electromagnetic tripper of circuit breaker does not match with load current of equipments at operation site
8	Isolating Switch	Overheated and glowed between dynamic and static contactors	Overload, poor contact or close incompletely
9	Instrument Transformer	Discharging noise and abnormal sound in transformer	Internal Fault
		Abnormal smell during full load operation	Joint loose or insulation damaged
		Spark discharge between winding and housing or lead wire and housing	Winding insulation damaged or joint under poor contact state
10	Busbar and Insulator	Check whether the porcelain part of insulator has flashover sign	Insulator breakdown; insulator contaminated seriously
		Check whether the color of busbar joint is normal or not	Poor contact or overloaded
11	Capacitor	Abnormal discharge noise during operation, joint of capacitor over-heating, capacitor swollen	Internal fault of capacitor
		operating voltage exceeds 10% above rated voltage and operating current exceeds 30% above rated current	Over-load operation
12	Instrument, Signal and Indicator	No display or display incorrectly	Breakdown
13	Arrester	Cracked	Breakdown. Replace with a new one in time
		Surface dirty	Dust accumulated too much
		Inclined, terminals at line side or grounding side loose	Not securely installed
14	Contactor	Running noise is loud	Head face of steel core is not flat or contaminated, etc.
		Contactor is too hot, burnt or with abnormal smell	Over-load operation, not connected securely, contactor is burnt on the contacting surface when it is opened under too big current
15	SF6 Load Switch Barometer	Display of barometer does not meet the specifications of manufacturer	SF6 gas leakage

2. 检 修

Overhaul

产品高、低压开关柜可打开柜门或拆下面板从正面进行一般检修，若进行大修或更换主要设备，需拆下产品顶盖固定螺母，吊开顶盖，然后吊出变压器或开关柜进行大修或更换。如出现此情况，建议与我公司联系。

The high/low voltage cabinet of product can be checked and repaired from the front by opening the cabinet door or removing the panel for ordinary service. If overhaul or replacement of the main devices is required, it is necessary to remove the locking nuts on the lid, hoist the lid, and then hoist the transformer or switch cabinet and take them out for overhaul or replacement. If this circumstance occurs, please contact with our company.

敬告：在以下阐述中若有未述及的检修项目请参照相关元器件安装使用说明书，或DL/T596–1996《电力设备预防性试验规程》进行。

NOTE: If some service items are not described in the following description, please refer to relevant installation and operation manuals of parts and components or DL/T596-1996 *Preventive Test Specifications of Power Equipment*.

敬告：在检修过程中，如发现其它未述及异常现象或超出处理故障能力范围时，应及时与我公司联系。

NOTE: During the process of overhaul, if any other abnormal circumstances which are not covered on this manual are found, or the failure is beyond your problem solving capability, please contact with our company in time.

2.1 外壳

Housing

表2 外壳检修

序号	项 目	周 期	检修内容	说 明
1	门锁	必要时	是否能够有效锁紧	维修或更换门锁
2	外壳密封	必要时	门、顶盖等密封结合部位有雨水渗漏现象	更换密封胶条；重新涂抹玻璃胶
			外壳是否出现明显破损锈痕	补漆

Table2. The Overhaul of Housing

No.	Item	Cycle	inspection Content	Instruction
1	Door lock	If necessary	Check whether it can be locked effectively	Repair or replace door lock
2	Housing Airproof	If necessary	Check whether sealing joints of door, cover, etc are penetrated by rain	Replace sealing tape, recoat silicon sealant
			Check whether the housing is rusted obviously due to breakage	Patching up

2.2 变压器
Transformers

表3　变压器检修

序号	项 目	周 期	要 求	说 明
1	油位	必要时	油位处于正常位置	应查出漏油原因，如是否为瓷套管破裂、密封件老化、散热器砂眼等，处理完成后应补充适量变压器油注(1)
2	绝缘油试验	1）1~3年或自行规定 2）必要时	参照GB7595《运行中变压器油质量标准》、GB/T14542《运行中变压器油维护管理导则》	
3	交流耐压试验	1）1～5年 2）大修后 3）必要时	1）10kV油变定期试验电压30kV 2）10kV干变定期试验电压按出厂试验电压值的0.85倍	1）可采用倍频感应法 2）现场条件不具备时，可只进行外施工频耐压试验
4	测温装置及其二次回路	1）1～3年 2）大修后 3）必要时	密封良好，指示正确 绝缘电阻一般不低于1MΩ	测量绝缘电阻采用2500V兆欧表
5	气体继电器及其二次回路	1）1～3年 2）大修后 3）必要时	整定值符合运行规程要求，动作正确，绝缘电阻一般不低于1MΩ	测量绝缘电阻采用2500V兆欧表
注：油变适用1～5，干变适用3、4。				

Table3. The Overhaul of Transformers

No.	Item	Cycle	Requirement	Instruction
1	Oil Level	If necessary	Oil level at normal level	Find out the reasons of oil leakage, for example whether the porcelain bushing is broken, sealing is ageing, gas cavity exists in radiator etc. After the problem is eliminated, add suitable amount of transformer oil Note(1)
2	Insulating Oil Test	1) once every1~3 years or define the period by yourself 2) if necessary	Refer to GB7595 *Transformer Oil Quality Standards During Operation* GB/T14542 *Guidelines for Transformer Oil Maintenance and Management During Operation*	
3	AC withstand Voltage Test	1) once every1~5 years 2) After overhaul 3) If necessary	1) 30kV test voltage for 10kV oil-immersed transformer 2) 85% of ex-factory test voltage for 10kV dry-type transformer	1) Adopt multiplier induction 2) If the site condition does not support, perform power frequency withstand voltage test
4	Temperature Measuring Device and its Secondary Circuit	1) once every 1~3 years 2) After overhaul 3) If necessary	Sealing well, displaying well, insulation resistance should not be less than 1MΩ	Use 2500V megohm meter to measure insulation resistance
5	Air Relay and its Secondary Circuit	1) once every1~3 years 2) After overhaul 3) If necessary	Setting parameters conform to operation requirement. Operate correctly, Insulation resistance should not be less than 1MΩ	Use 2500V megohm meter to measure insulation resistance
Note: 1~5 apply to oil-immersed transformer and 3~4 to dry transformer				

注(1)：补油或不同牌号油混合使用的规定

Note (1): Requirements for Adding Oil or Using Oil Mixture

① 补加油品的各项特性指标不应低于设备内的油。
Each characteristic of added oil should not be lower than the oil in the equipment.

② 不同牌号新油原则上不宜混合使用。
Principally, of new oils with different grades should not be mixed for use.

③ 对于国外进口油、来源不明的以及所含添加剂的类型并不完全相同的油，如需要与不同牌号油混合时，应预先通过混油试验。
For oils which are imported, from unknown sources and with different additives, if they need to be mixed with different grades oil, please perform mixing oil test first.

补充变压器油方法

Method of Adding Transformer Oil

① 使用没有被污染的泵和软管，应采用金属或非橡胶软管。
Use a uncontaminated pump and tube which should be a metal or non-rubber tube.

② 将油泵的出油管接在油箱的注油口上；从密封的临时容器的底部将油泵入变压器油箱，注意不可让进油管吸入空气。
Connect the oil outlet tube of pump to the oil filler of oil tank, pump the oil from the bottom of temporary sealed container to the oil tank of transformer. Be careful not to let the tube suck air.

③ 为防止高速油流充气，应缓慢的泵入，直至所需油位。
In order to avoid high-speed oil flow charging air, pump oil slowly until it reaches the required oil level.

2.3 电气元件
Electric Components

在产品进行设备检修时必须进行分闸操作，即必须保证设备中的所有隔离开关和断路器已经全部断开，并且挂警示牌、设遮挡栏并接好地线。
Turn off the power before checking and repairing the product, namely, ensure all the isolating switches and circuit breakers are disconnected. Hang a warning board, build a fence and ground the equipment.

表4　电气元件检修

序号	项 目	周 期	要　求	说　明
1	断路器注(2)	1）1～3年 2）必要时	检查各连接头接触是否良好，有无松动或发热异常；检查分合闸指示与断路器实际状态是否相对应；检查操作机构是否清洁无腐蚀，无杂物卡阻；	清除积尘，可适当对操作机构加润滑油；对于触头氧化的部位，需进行去除氧化层工作；拧紧螺钉、螺母
			辅助回路和控制回路交流耐压试验：2KV	
			辅助回路和控制回路绝缘电阻不应小于2MΩ	采用500V或1000V兆欧表
2	隔离开关	1）1～3年 2）必要时	检查操作是否灵活，本体是否完好，三相触头在合闸时同期到位，无错位或不同期到位现象	检查操作机构、传动连杆、底座轴承以上各部清洗、加润滑油或更换损坏部件
			检查动静触头间接触是否良好，操作机构是否清洁无腐蚀	清洁氧化层；更换损坏触头、触指或弹簧
			二次回路绝缘电阻≥2MΩ	采用1000V兆欧表
3	刀熔开关	1）1～3年 2）必要时	金属外壳接地是否牢固且接触良好	旋紧
			熔断器与触头的接触检查	清洁氧化层
			检查外壳内、底座有无熔丝熔断后造成的金属粉尘	应清扫干净，以免降低绝缘性能
			其余同隔离开关	
4	负荷开关	大修时	真空灭弧室真空度的测量（针对真空负荷开关）	有条件时进行，其余参考断路器、隔离开关和刀熔开关
5	互感器注(3)	1）1～3年 2）必要时	检查一、二次回路接线是否牢固，各接头是否松动 检查二次侧接地是否牢固且接触良好	清洁氧化层并旋紧
			绝缘电阻（自行规定）	2500V兆欧表
6	电容器注(4)	1）投运1年内 2）1～3年 3）必要时	检查电容器各连接部位接触是否良好	清洁氧化层并旋紧
			是否出现鼓肚现象	若有，则更换该电容器
			交流耐压试验	试验电压为出厂试验电压的75%
			检查电容器单台保护熔断器应完好，无熔断。每月不少于1次	当电容器的熔断器熔丝熔断时，先进行外部检查，如：外部有无闪络痕迹、外壳是否变形及接地装置有无短路等，然后用绝缘摇表摇测极间及极对地的绝缘电阻值。如未发现故障迹象，可换好熔断器熔丝后继续投入运行
7	接触器	1）投运1年内 2）必要时	检查各紧固件是否松动 接触器触头表面应保持清洁	清洁氧化层并旋紧
			测量触头相间绝缘电阻	阻值不低于10MΩ
			检查灭弧罩	检查灭弧罩是否破损；灭弧罩位置有无松脱和位置变化
8	避雷器	1）每年雷雨季节前 2）必要时	参照GB11032《交流金属氧化物避雷器》、DL/T804《交流电力系统金属氧化物避雷器使用导则》	避雷器的型号必须和更换前一致，或者由我公司指定
9	带电显示装置	1）1年 2）大修后	能正确显示	

Table 4 The Overhaul of Electric Components

No.	Item	Cycle	Requirement	Instruction
1	Circuit Breaker note(2)	1) once every1-3 years 2) If necessary	Check whether each joint is all right whether it is loose or over-heated. Check whether closing / opening indication conforms to actual state of breaker. Check whether operating mechanism is clean and not corroded as well as not jammed.	Remove dust and add lubricating oil to operating mechanism. For the oxide part of contactor, need to remove the layer of oxide. Tighten the screws and nuts.
			AC withstand voltage test of secondary and control circuits: 2kV	
			Insulation resistance of secondary and control circuits should not be less than 2MΩ	Use 500V or 1000V megohm meter
2	Isolating Switch	1) once every1~3 years 2) If necessary	Check whether operation is flexible, main body is intact, and contactors of three phases close synchronously without misplacement or problem of closing asynchronously	Check operation mechanism, transmission rod, base and bearing, clean them, and add lubricating oil or replace broken parts.
			Check whether contact between dynamic and static contactors is all right and whether operating mechanism is clean and not corroded	Remove oxide layer, replace broken contactor, contact finger or spring
			Insulation resistance of secondary circuit ≥ 2MΩ	Use 1000V megohm meter
3	Knife Switch	1) once every 1~3 years 2) If necessary	Check whether housing ground well and connection is all right	Screw down
			Check contact between isolating switch and contactor	Remove oxide layer
			Check whether metal dust generated by blown fuse exists in housing and base.	Clean up to avoid reducing insulating performance
			Other parts is same as isolating switch	
4	Load Switch	During overhaul	Measurement of vacuum degree of vacuum arc extinguishing chamber (for vacuum load switch)	Perform this if condition allows. For others, refer to breaker, isolating switch and knife fuse switch
5	Instrument Transformer note(3)	1) once every 1~3 years 2) If necessary	Check whether connections of primary and secondary circuits are secured and each joint is tight. Check whether secondary side grounding is secured and connection is all right	Remove oxide layer and screw down
			Insulation resistance(defined by yourself)	Use 2500V megohm meter
6	Capacitor note(4)	1) During the 1st year of Commissioning 2) once every1~3 years 3) If necessary	Check whether each joint of capacitor is all right	Remove oxide layer and screw down
			Check whether capacitor deform and swell	If any, replace the capacitor
			AC Withstand Voltage Test	Test voltage is 75% of ex-factory test voltage
			Protection fuse of single capacitor must be intact. Check it no less than once a month.	When fuse of capacitor breaks, perform external check first, for example: whether there is flashover outside, whether housing is deformed and whether grounding device is short circuit. Then measure the insulation resistances between polarities and between polarity and ground . If no fault is found, run the equipment after replacing fuse.
7	Contactor	1)During the 1st year of Commissioning 2)If ne cessary	Check whether each fasten is tight Surface of contactor should keep clean.	Remove oxide layer and screw down
			Measure insulation resistance of contactor between phases	Insulation resistance is no less than 10 MΩ
			Check arc extinguishing shield	Check whether arc extinguishing shield is broken, the position of arc extinguishing shield is changed
8	Arrester	1) Before thunderstorm season 2)If necessary	According to GB11032 *Metal Oxide Lightening Arresters for A.C. System*, DL/T804 *Application Guide for Metal Oxide Lightening Arresters for AC Power System*	Type of arrester must be same as the replaced one, or specified by our company
9	Live Indicator	1)1 year 2) After overhaul	Display correctly	

注(2)：断路器开断短路电流后，应立即进行以下检查：

Note (2): After the circuit breaker cut off the short-circuit current, check the followings at once:

A、上下触点是否良好，螺钉、螺母是否拧紧，绝缘部分是否清洁，发现有金属粒子残渣时应予清除干净；

Check whether the upper and lower contacts are well. Check whether screws and nuts are locked tightly. Check whether the insulating parts are clean and whether there is any metal particle residue, remove it.

B、灭弧室的栅片间是否短路，若被金属粒子短路，应用锉刀将其清除，以免再次遇到短路时，影响断路器可靠分断；

Check whether any short circuit exists between the grids of arc extinguishing chamber. If they are shorted by any metal particle, remove them with a grater so as to avoid it influencing the reliable action of circuit breaker when coming across short circuit next time.

C、电磁脱扣器的衔铁，是否可靠的支撑在铁芯上，若衔铁滑出支点，应重新放入，并检查是否灵活。

Check whether the armature of electromagnetic tripper is supported on the core reliably. If the armature slips out of the supporting point, put it back and check whether it is flexible or not.

注(3)：互感器接线注意事项

Note (3): Notices for Wiring Instrument Transformer

电压互感器在运行中一定要保证二次侧不能短路，若二次侧短路时，将产生很大的短路电流，巨大的发热会将互感器烧坏，甚至导致发生设备爆炸事故。

Ensure there is no short circuit at the secondary side of potential transformer during operation.Otherwise, high short circuit current will be produced and enormous heat will burn down the instrument transformer or even cause explosion accident of the equipment.

电流互感器二次绕组不能开路，否则，将产生高电压，危及设备和运行人员的安全；同时因铁芯过热，有烧坏互感器的可能。为此，在二次回路上工作时，应先将电流互感器二次侧短路。

The secondary winding of current transformer can not be open. Otherwise, it will cause high voltage which endangers the safety of equipment and operators. At the same time, because of the over-heating of core, the instrumen transformer may get burnt. Therefore, when working on the secondary circuit, short the secondary side of current transformer first.

注(4)：故障电容器处理方法

Note (4): Handling Failed Capacitor

应断开电容器的上一级开关，并对电容器组放电后进行。由于故障电容器可能发生引线接触不良、内部断线或熔丝熔断等，因此有部分电荷可能未放尽，所以检修人员在接触故障电容器之前，还应戴上绝缘手套，先用短线将故障电容器两极短接，放电后方可动手拆卸和更换。

Turn off the previous-level switch of capacitor and discharge the capacitor group. Because the failed capacitor may cause poor contact of lines, disconnection of internal line or fuse broken and so on, part of electric charges may not be discharged completely. Therefore, personnel performing the overhaul should wear insulting gloves before touching any capacitor. Short the two polarities of failed capacitor with a short wire. After it is discharged completely, remove and change the capacitor.

2.4 母线、绝缘子及电缆

Busbar, Insulator and Cable

表5　母线、绝缘子及电缆检修

序号	项 目	周 期	检修内容	说　明
1	母线和绝缘子	1）1～3年 2）大修时	检查绝缘子是否存在明显的脏污，瓷质部分应无破损和裂纹现象。	在清洁过程中，遇到疑似损坏的绝缘子时，可将绝缘子取出检查，出现裂纹应进行更换，以保证绝缘水平，延长绝缘子使用寿命
			检查母线与母线或母线与电器端子的螺栓搭接面是否松动、过热或接触不良现象；检查母线有无过热、氧化	对松动的螺栓应进行紧固处理；母线接触面应光滑、清洁、无裂纹
			母线绝缘	不应低于1MΩ/kV
			母线交流耐压试验	Ue≤1kV时现场试验时施压3.2kV
				Ue＝15kV时现场试验时施压43kV
2	橡塑绝缘电力电缆	1）3.6/6kV及以上3年 2）3.6/6kV以下5年	电缆主绝缘绝缘电阻（自行规定）	0.6/1kV电缆用1000V兆欧表；0.6/1kV以上电缆用2500V兆欧表（6/6kV及以上电缆也可用5000V兆欧表）
		新做终端或接头后	电缆主绝缘直流耐压试验	1）加压时间5min，不击穿 2）耐压5min时的泄漏电流不应大于耐压1min时的泄漏电流
		1）3.6/6kV及以上3年 2）3.6/6kV以下5年	电缆外护套、内衬层绝缘电阻（每千米绝缘电阻值不应低于0.5MΩ）	采用500 V兆欧表。当每千米的绝缘电阻低于0.5MΩ时，应采用DL/T596附录D中叙述的方法判断外护套是否进水

Table5 The Overhaul of Busbar, Insulator and Cable

No.	Item	Cycle	Overhaul Content	Instruction
1	Busbar and Insulator	1) once every 1~3 years 2) During overhaul	Check whether insulator is obviously dirty. Porcelain part should not be broken and have any crack	During cleaning, if you suspect insulator is broken, take it out and check it. To ensure insulating performance and extend its service life, cracked one should be replaced.
			Check whether any contact of bolts, between busbars or between busbar and terminal of electrical appliance gets loose, overheated or poorly contacted. Check whether busbar is overheated or oxide	Tighten loose bolt. Contacting surface of busbar should be smooth, clean and free of cracks.
			Insulation test for busbar	No less than 1MÙ / kV
			AC withstand voltage test for busbar	If Ue=1kV, apply 3.2kV voltage when testing on site
				If Ue=15kV, apply 43kV voltage when testing on site
2	Rubber and Plastic Insulating Power Cable	1) 3 years for 3.6/6kV and above 2) 5 years for 3.6/6kV and below	Insulation resistance test for main insulation of cable (to be specified by yourself)	For 0.6/1kV cable, use a 1000V megohm meter, For cable above 0.6/1kV, use a 2500V megohm meter (for cables above 6/6kV and above, use a 5000V megohm meter)
		After making new terminal or connector	DC withstand voltage test for main insulation of cable	1)Applying voltage for 5 minutes, no breakdown 2)Leakage current when performing withstand voltage test for 5 minutes should not be more than that when performing withstand voltage test for 1 minute
		1) 3 years for 3.6/6kV and above 2) 5 years for 3.6/6kV and below	Testing insulating resistances of cable outer bushing and underlayer (insulating resistance should not be less than 0.5 MÙ per kilometer)	Use a 500V megohm meter. When insulting resistance is less than 0.5 MÙ per kilometer, method described in Appendix D of DL/T596 should be adopted to determine whether outer casing is penetrated with water.

2.5 其它
Others

表6 其它检修或试验

序号	项 目	周 期	检修内容	说 明
1	电气连接端子	必要时	连接处松动	紧固处理
2	蓄电池	1）每季度 2）必要时	测电池单体电压及终端电压 充电必须采用限流恒压方法进行	不能仅把性能指标不够的蓄电池单独更换为保证电池有足够的容量，每年要进行一次容量恢复试验，让电池内的活化物质活化，恢复电池的容量
3	绝缘电阻试验	1）1～3年 2）大修后	应符合制造厂规定	在交流耐压试验前、后分别进行
4	交流耐压试验	1）1～3年 2）大修后	试验电压值按DL/T593规定	1) 试验电压施加方式：合闸时各相对地及相间；分闸时各相断口 2) 相间、相对地及断口的试验电压值相同
5	五防性能检查	1）1～3年 2）大修后	应符合制造厂规定	五防是指： ①防止误分、误合断路器； ②防止带负荷拉、合隔离开关； ③防止带电（挂）合接地（线）开关； ④防止带接地线（开关）合断路器； ⑤防止误入带电间隔。

Table6 Other Overhaul or Testing

No.	Item	Cycle	Overhaul Content	Instruction
1	Electrical Connecting Terminal	If necessary	Connection loose	Fixing treatment
2	Storage Battery	1)each quarter 2)if necessary	Test single voltage and terminal voltage of battery. Battery must be charged under the limiting current and constant voltage	Not to replace battery with poor performance only ; in order to ensure battery with efficient capacity, capacity recovery test should be done every year so that activated material in battery can be activated and battery capacity can be recovered
3	Insulating Resistance Test	1) once every 1~3 years 2)after overhaul	Conform to the regulations specified by manufacturer.	Before and after AC withstand voltage test
4	AC Withstand Voltage Test	1) once every 1~3 years 2) after overhaul	Testing voltage should meet the requirement of DL/T593	1) Method of applying test voltage: each phase to ground and between phases when switching on; breaking point of each phase when switching off 2) Voltage between phases, phase to ground as well as cut-off are the same
5	Inspecting Five Preventive Performances	1) once every 1~3 years 2) after overhaul	Conform to the regulations specified by manufacturer.	Five preventions refer to: ① prevent circuit breaker from mistakenly opening or closing; ② prevent turning on or off insulting switch under load ③ prevent turning on (off) the grounding (wire) switch under live state ④ prevent turning on the circuit breaker with grounding wire (switch) ⑤prevent entering live compartment spaces by mistake

3. 除 尘

Dedusting

当欧变高、低压室和变压器室内部及各部件积尘较多时，可用干燥的压缩空气吹，清洁时注意

When dust accumulates in the high-voltage chamber, low-voltage chamber and transformer chamber as well as various parts of prefabricated substation, dry compressed air can be used to blow off it. Pay attention to the following points when cleaning:

①清洁时注意安全防护，应该断电后进行。

Pay attention to safety protection when cleaning. Cut off the power beforehand.

②不得使用湿布对各部件、零件进行抹擦。

Do not wipe the parts or components with wet cloth.

③根据欧变的安装运行环境确定除尘的频率，以保证积尘厚度不致过大。

Set the frequency of de-dusting based on the installing and operation conditions of prefabricated substation so as to avoid too much dust accumulated.